TEMPE™

self-heating QCM

user guide

Gen_2

COLNATEC

Contents

Contents

Tempe™ at a Glance

1

This guide discusses assembly and proper care and handling of Tempe™ (2nd generation) sensor with temperature control.

Tempe™ Subcomponents

The sensor head features many sub-components. The usage of these components will be detailed in later sections.

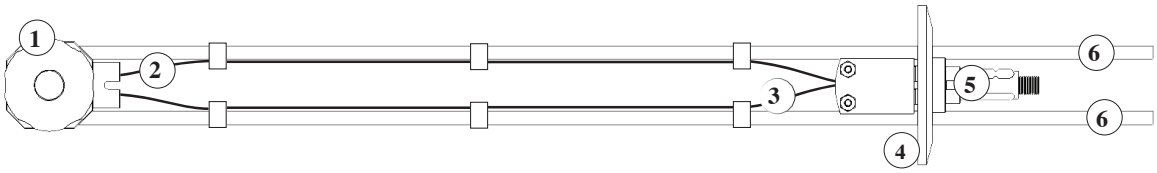

1. Sensor Head
   Houses quartz crystal

2. Heater Control Cable
   Controls heater

3. Crystal Signal Cables
   Relays crystal oscillation information

4. Flange
   Acts as nearly air-tight barrier sealing sensor head in chamber

5. Thermocouple Connector
   Measures temperature around sensor head

6. Cooling Tubes
   For cooling sensor head

INSPECT PRODUCT CONDITION ON ARRIVAL Examine Tempe™ for any signs of physical damage that may have occurred during shipping. Make sure that the tamper-evident labels are intact. Before shipping, Tempe™ was calibrated and tested by Colnatec to meet the highest quality standards. It is important that you take a few minutes to inspect the product to ensure that your equipment was not damaged or otherwise tampered with during transit.

Tempe™ Base Subcomponents

The sensor head features many base sub-components. The usage of these components will be detailed in later sections.

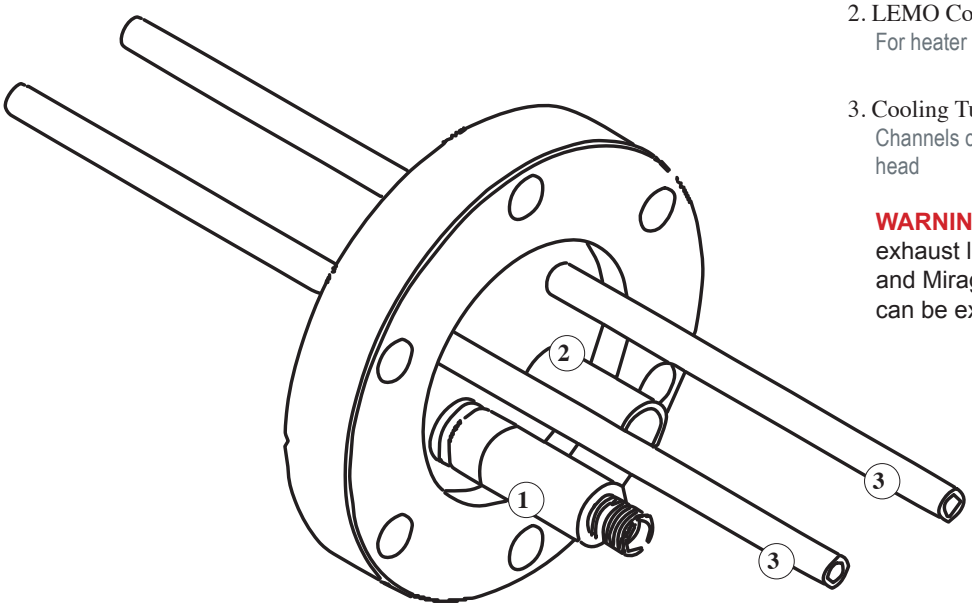

1. SMA Coaxial Connection
   For crystal frequency measurement

2. LEMO Connection
   For heater control

3. Cooling Tubes
   Channels cool air into sensor head

WARNING Air exiting exhaust line when heater and Mirage™ are active can be extremely hot.

Eon™ System Components

2

Eon™ and Accessories

Tempe-Eon™ ships with a variety of accessories.

Eon™. Designed for high temperature thin film coating process control. With Eon™, Tempe™ can achieve and maintain any temperature within a range of 40-500ºC and can even initiate a high-temp, self-cleaning “bake cycle” that extends crystal life and reduces interruptions from crystal failure in a continuous process environment.

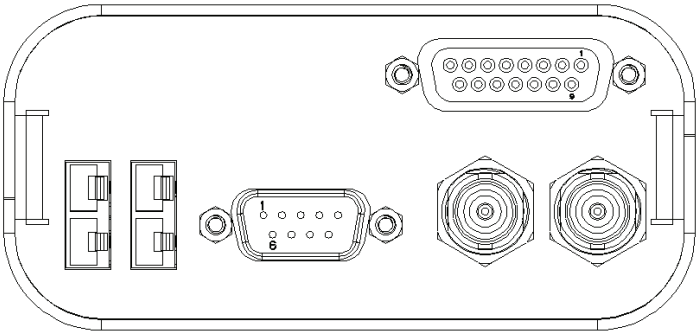

INSPECT PRODUCT CONDITION ON ARRIVAL Examine Eon™ for any signs of physical damage that may have occurred during shipping. Make sure that the tamper-evident labels are intact. Before shipping, Eon™ was calibrated and tested by Colnatec to meet the highest quality standards. It is important that you take a few minutes to inspect the product to ensure that your equipment was not damaged or otherwise tampered with during transit.

WARRANTY LABEL If the warranty label has been tampered with, “VOID” will appear where the warranty label was originally placed. If this is visible at the time of arrival, it is important that you contact Colnatec immediately after receiving the product.

Accessories

Tempe™ system ships with a variety of accessories.

Mirage™ air-cooling system. As part of the Eon™ temperature-compensation system, this cooling accessory channels compressed, cold air into the Tempe™ sensor in order to maintain consistent temperatures inside crystal compartment.

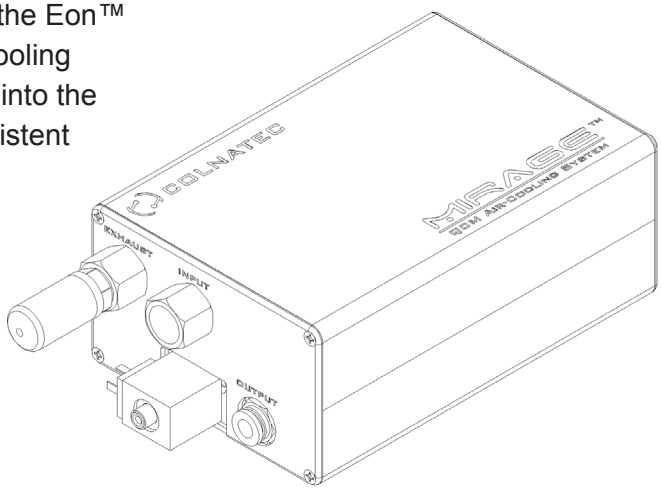

Mirage power adapter. Combines Mirage™ power supply and relay cables.

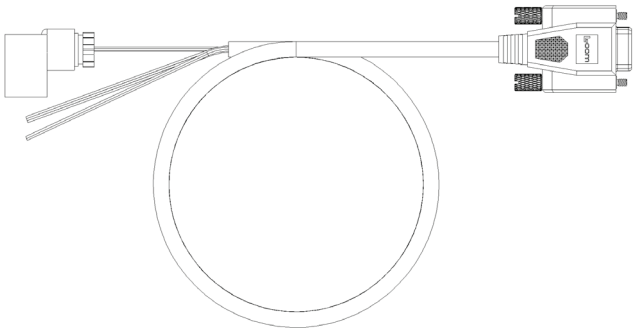

Mirage air-cooling tube. Delivers cold air into sensor head cooling tubes.

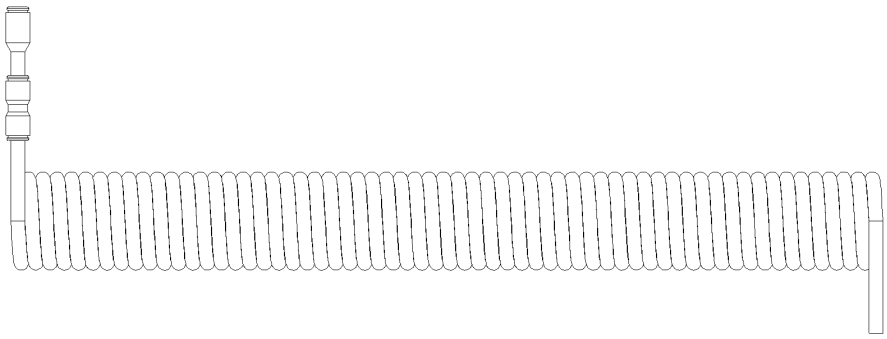

Power supply and cable. Input 100-200 VAC, 50/60Hz, 2 A. Output 24V, 3.75 A, 90W Max (system includes one geographically suitable power plug).

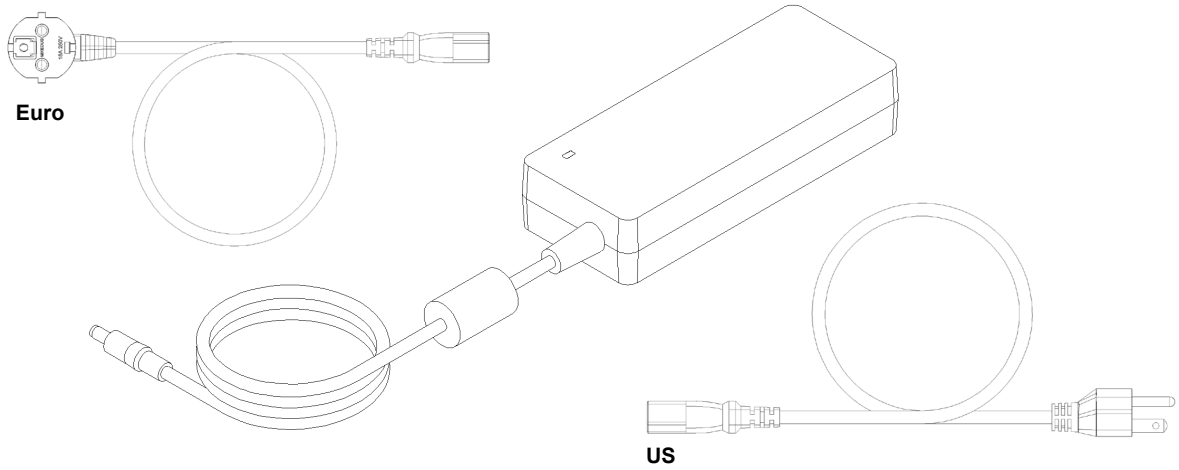

RS-232 extension cable. Male-to-female serial cable.

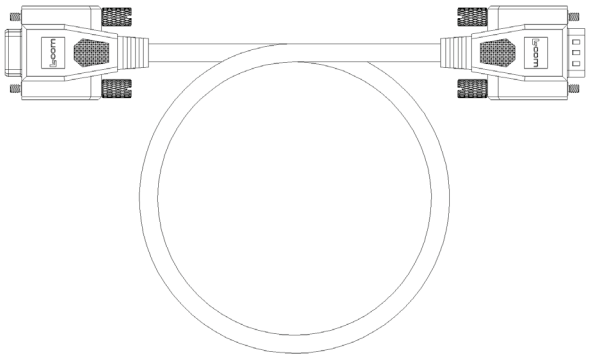

USB to RS-232 adapter. Connects RS-232 cable and PC.

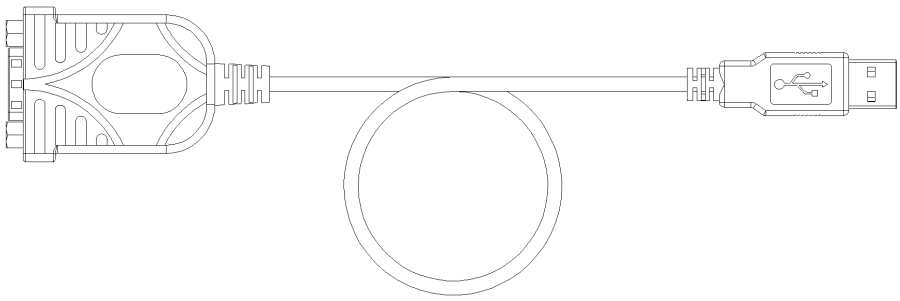

External oscillator. Replaces the Eon™ internal oscillator.

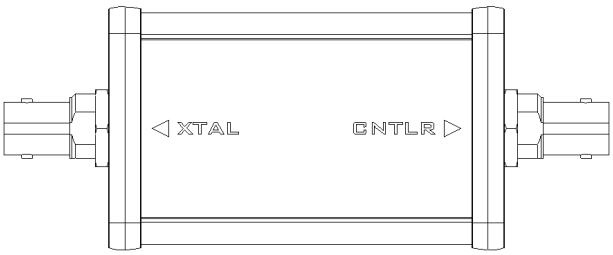

Software CD. Contains Eon™ software suite.

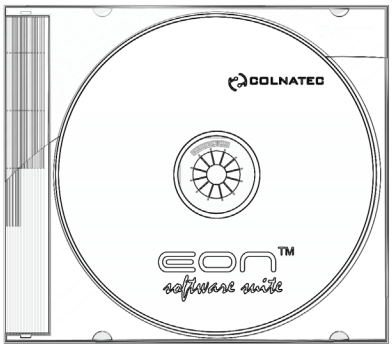

Mirage™ Air-Cooling System

The self-heating Tempe™ sensor employs a unique cooling system called the Mirage™ Air-Cooling System that connects through the DB-9 port. The Mirage™ forces cold air through the Tempe™ crystal compartment to counterbalance heat.

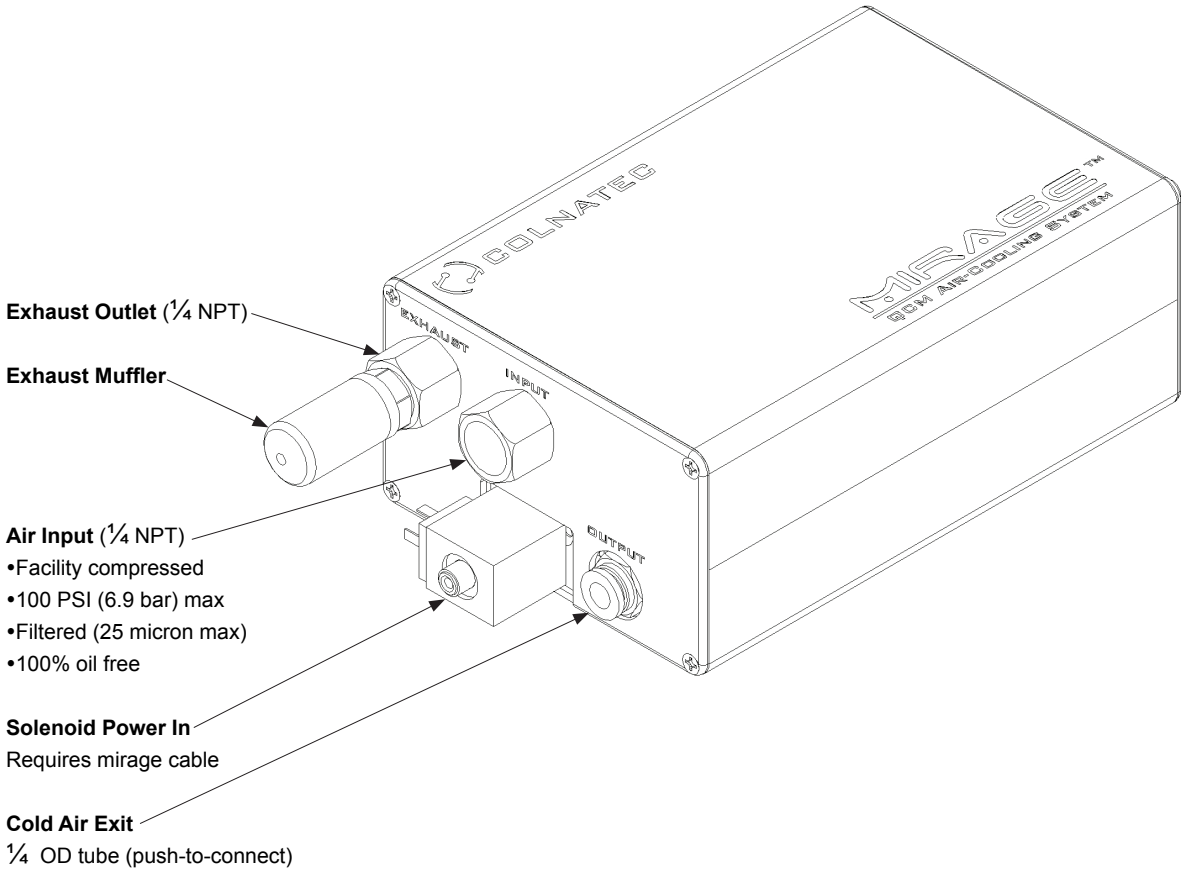

How it works

In order to achieve and maintain a specific target temperature on the crystal, the Tempe™ first heats the crystal to the temperature set in the deposition control menu of the Eon™ GUI. If the Tempe™ exceeds the desired temperature, the Mirage™ is triggered, blasting the crystal compartment with cold air and returning the crystal surface to the desired temperature. This type of regulated, hot-to-cold ratio control mechanism is capable of sustaining a tolerance of +/-1° C.

Because it is triggered by a simple relay input, the Mirage™ can be used as a cooling device in other applications.

Mirage™ Features

Refrigerant-Free Air Cooling
Not only maintenance free and environmentally safe, but when using regulated air the Mirage™ is easily capable of holding the sensor to a tolerance of +/-1°C.

Maintains Temperature up to 500°C
The Mirage™ produces a temperature output capability of 28°C (50°F) BELOW the supply air temperature, allowing the Tempe™ sensor head to maintain any temperature within 50-500°C.

Quiet Operation
While the cold air output is connected to the Tempe™ sensor head through a cooling line, the Mirage™ reduces noise by muffling and dispersing the hot air output.

Versatility of Application
Working from a simple relay input, the Mirage™ can be used as a cooling device in alternative applications.

⚠ **WARNING** Operating temperature SHOULD NOT be allowed to exceed 500°C. Equipment damage will likely result.

Eon™ Inputs & Outputs

3

This guide describes Eon™ controller with temperature control (3rd generation).

Eon™ Connectors

Eon™ Front

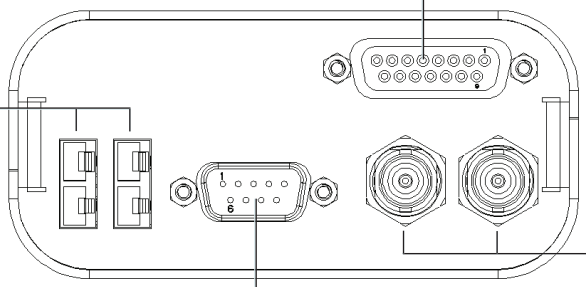

Eon™ Back

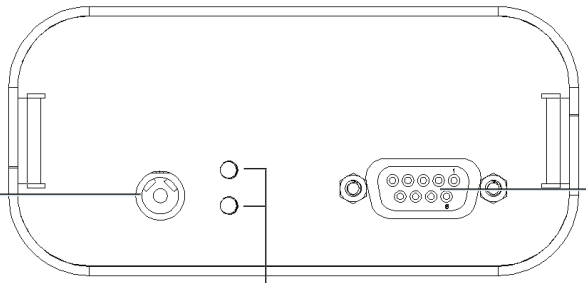

WARNING Make sure the correct hardware is used with Eon™ inputs and outputs. See proper setup procedures in this manual and in the Tempe-Eon™ quick reference guide.

WARNING Only the provided power supply should be used with Eon™. Not doing so will damage product and void warranty. Make sure power supply has a 24 VDC.

Eon™ Inputs

The Eon™ utilizes five (5) inputs. Make sure the correct hardware is used with these inputs.

Power

Only the provided power supply should be used with Eon™. Not doing so will cause hardware damage to Eon™ that will not be covered by warranty. Ensure that the power supply has a 24 VDC.

COM Port

Connect an RS232 cable to this port. Always use the provided USB to RS232 cable.

BNC Sensor Inputs

The Eon™ controller requires an external oscillator. The cable between external oscillator and the crystal should remain as short as possible to avoid noise. The advisable maximum acceptable length is 36 inches (914 mm). The cable between the oscillator and Eon™ controller has been tested successfully at 50 feet.

TC Connection

Receives temperature data.

Heater and RTD Input/Output

Connects to Tempe™ to control heating element.

Eon™ Outputs

The Eon™ utilizes two (2) outputs. Make sure the correct hardware is used with these outputs.

DB9 Connector

Connects the 0-5 VDC output for the deposition source, the 24 VDC Mirage™, and the relay control.

DB15 Connector

Connects Eon™ to Tempe™ heater and RTD; used to control the Tempe™ temperature.

Hardware Connections

4

Preparing Tempe™ for Chamber

Removing Mock Crystal

1. Turn cap COUNTER CLOCKWISE to loosen and remove.

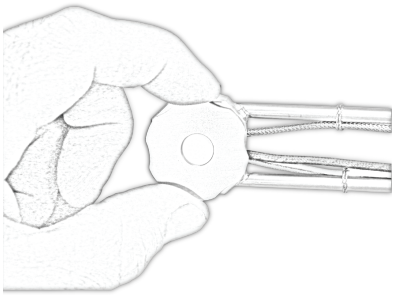

2. Flip cap over to access crystal retainer ring. Turn retainer ring COUNTER CLOCKWISE until loose.

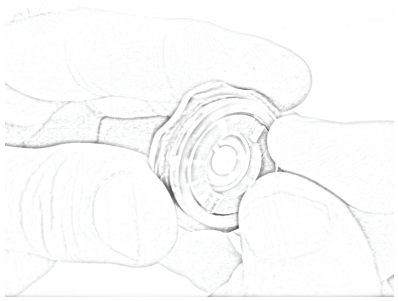

3. Remove retainer ring to access mock crystal.

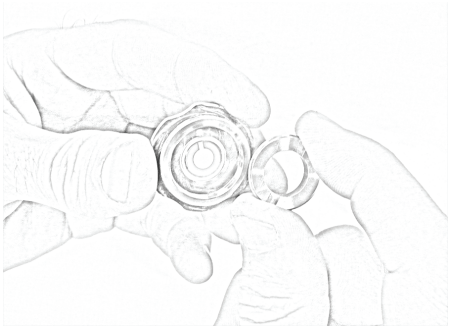

4. Remove mock crystal from sensor head cap.

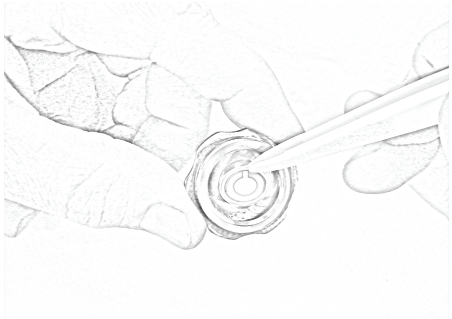

Adding New Crystal

1. Rotate crystal carousel until the round opening appears above an available crystal.

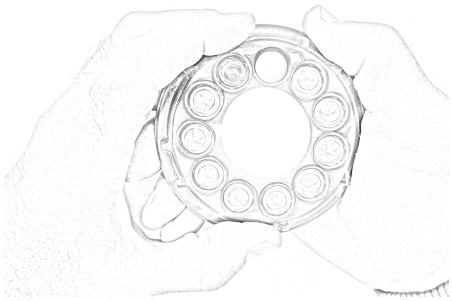

2. Place rear of sensor head against the opening.

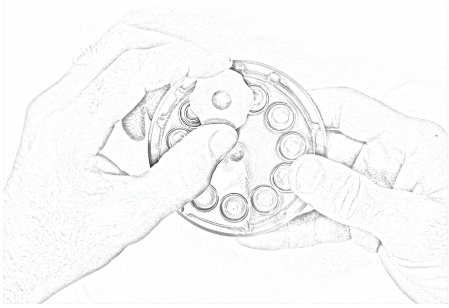

3. Flip crystal carousel and allow crystal to drop into sensor cap housing.

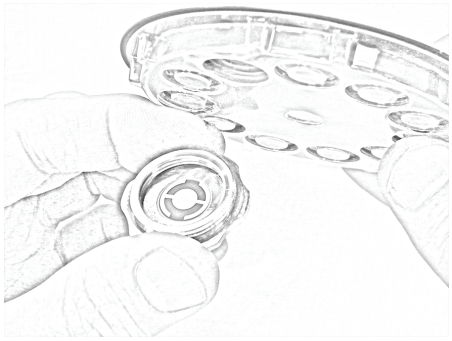

4. Use a plastic prod to adjust crystal position until crystal rests snugly in the crystal seat.

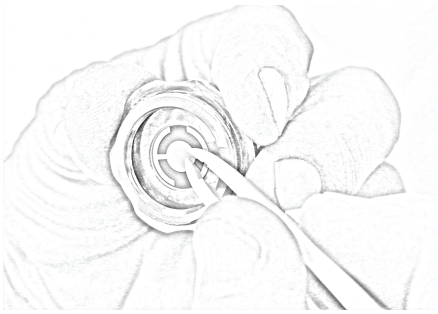

5. Place the threaded side of the retainer ring onto the corresponding threads of the sensor cap. Tighten the retainer ring by turning the ring CLOCKWISE.

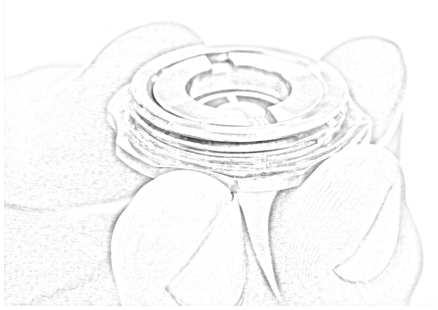

6. Place cap onto corresponding threads of crystal compartment. Turn CLOCKWISE until secure.

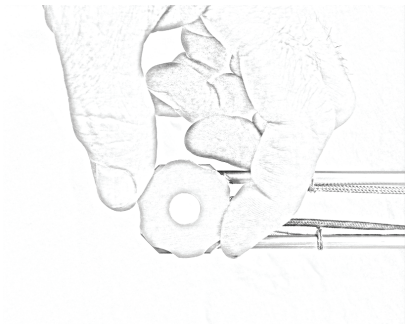

Chamber Installation

1. Remove copper gasket from packaging and thread onto sensor head.

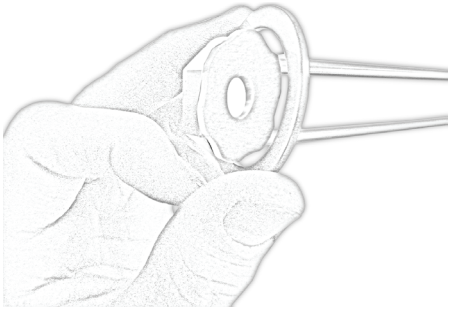

2. Fit gasket into circular groove on Conflat.

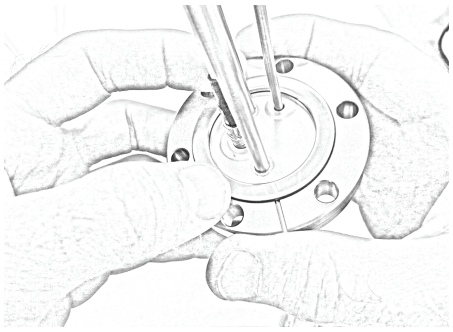

3. Hold copper gasket in place while inserting sensor head into chamber feedthrough.

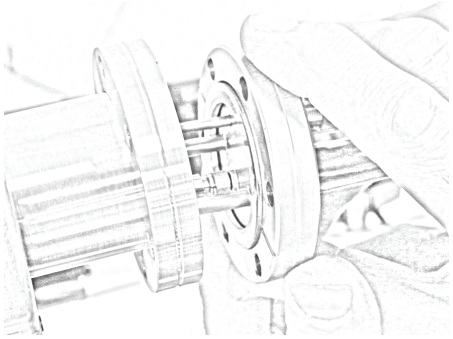

4. Press sensor head and feedthrough flanges together. Align bolt holes. Apply bolts and plate-nuts. Tightening bolts compresses copper gasket between a sharp edge and a tapered groove, thus creating a strong seal.

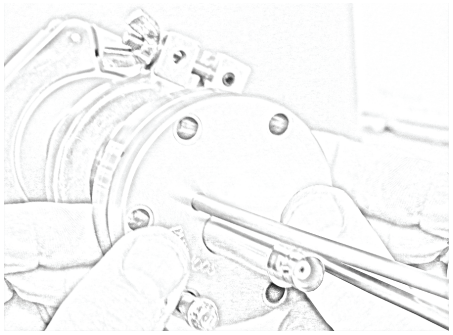

6. **Access to Base Connections**
   Once the bolt ring has been tightened into place, user will have open access to all of the base connections on the Tempe™. (See Page 5 for a complete list of all base connections and their purpose).

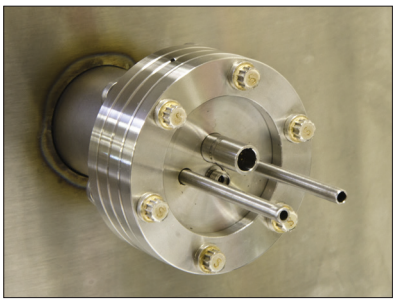

WARNING Hand-tighten flange bolts before using wrench, alternating among bolts and using a sequential torque pattern.

Over-tightening flange bolts may cause microfractures to develop in copper gasket. Seal may become weakened, resulting in chamber leakage.

Connecting to Tempe™

1. **BNC Coaxial Cable to Position Tempe™**
   Spin cable in place using cable shaft until resistance is felt. (Twisting cable shaft past point of resistance may damage cable). Roll fingertip over connector to tighten.

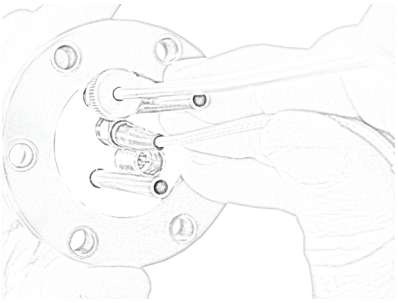

2. **Heater Control Cable to Tempe™**
   The 4-pin LEMO connector provides heater control and RTD measurement. To install, push until it clicks in place.

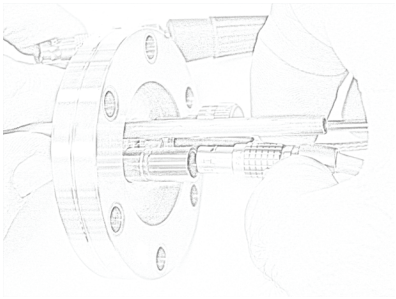

3. **Mirage™ Cooling Line to Tempe™**
   The cooling line is connected to the Mirage™ via an insulated cooling tube. Slide “push-to-connect” fitting onto the 3/16” cooling pipe projecting from the Tempe™ flange. Featuring an interior detent, cooling tube will snap securely in place.

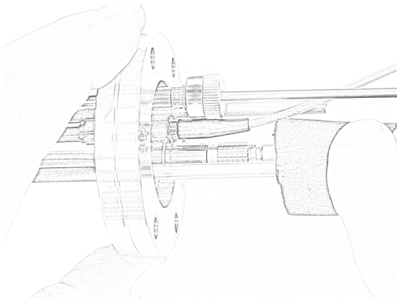

WARNING Misaligned coupling of LEMO connectors can result in severe damage to Tempe™.

WARNING Length between the Tempe™ crystal compartment and the Eon™ should NOT exceed 30 inches (76 cm) to avoid erratic noise levels in oscillation reading.

Electronics Connections

5

Connecting Tempe™ to Eon™

1. **BNC Coaxial Cable to Eon™**
   Slide coaxial connector onto BNC Sensor Input 2.

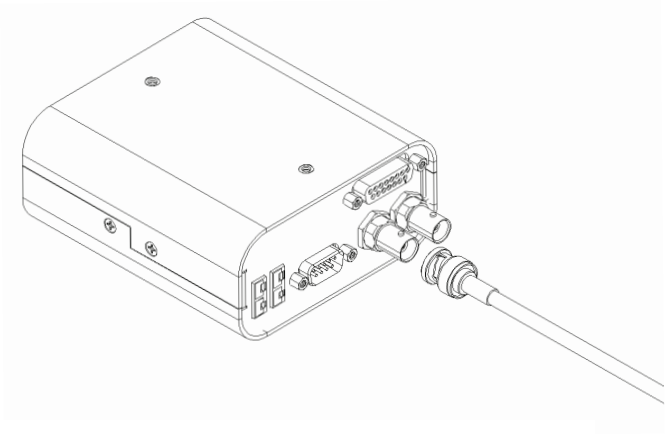

2. **Heater Control Cable (DB-15 Connector) to Eon™**
   Plug DB-15 connector into the Eon™ 15-pin male heater port.

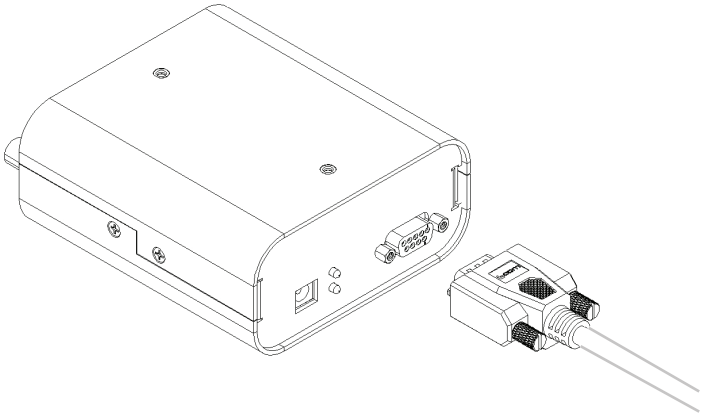

To avoid erratic noise levels in oscillation reading, the length between the Tempe™ crystal compartment and the oscillator should not exceed 36 inches (914 mm)

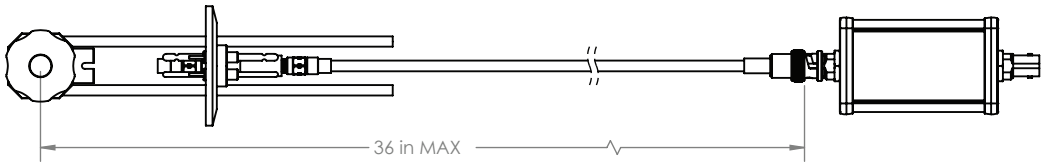

WARNING The cable between the external oscillator and the crystal should remain as short as possible to avoid noise. The advisable maximum acceptable length for the cable is 36 inches (914 mm).

WARNING DO NOT allow operating temperature to exceed 500°C. Equipment damage will likely result.

Connecting Hardware and Electronics

1. **Cold Air Output from Mirage™ to Tempe™**
   Slide the 3/16” tube onto the “push-to-connect” fitting on rear of the Mirage™ Cooling System. The Mirage™ provides a maximum output of 28˚C (50˚F) below the compressed air source.

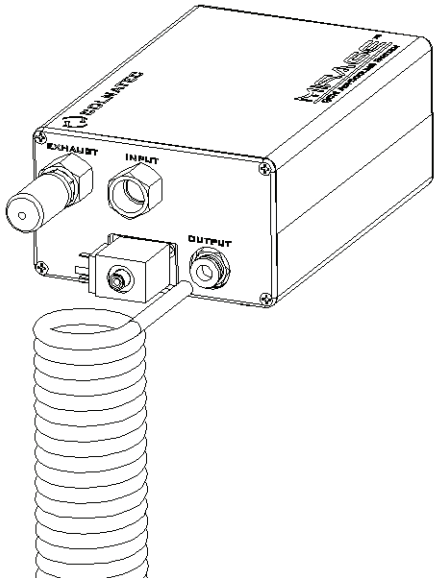

2. **Compressed Air Input to Mirage™**
   Connect the Mirage™ to a filtered and oil-free compressed air source. (Air fittings may vary by country but require a 1/4 NPT female connection).

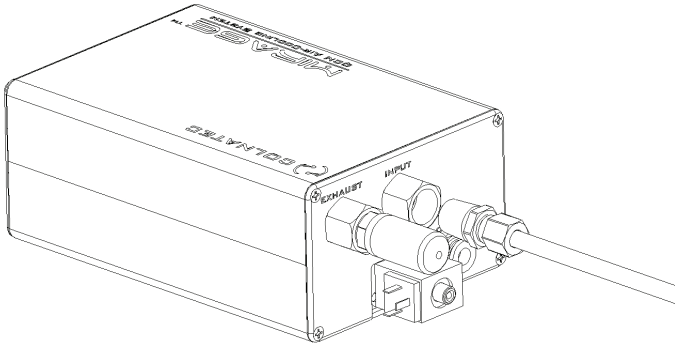

3. **Eon™ Supplies Power to Mirage™ through Power Module**
The 3-pin solenoid module provides power to Mirage™. Tighten integrated screw after mating to Mirage™.
The DB-9 connector on other end attaches to male I/O port on Eon™.

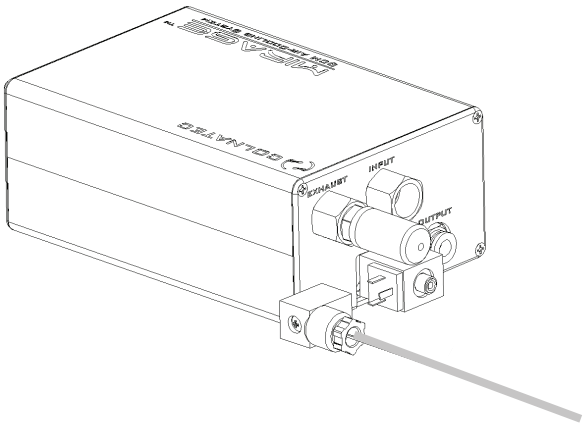

4. **Connect Mirage™ Cable to Eon™**
Connect 9-pin female-side of Mirage™ cable to Eon™ I/O port.

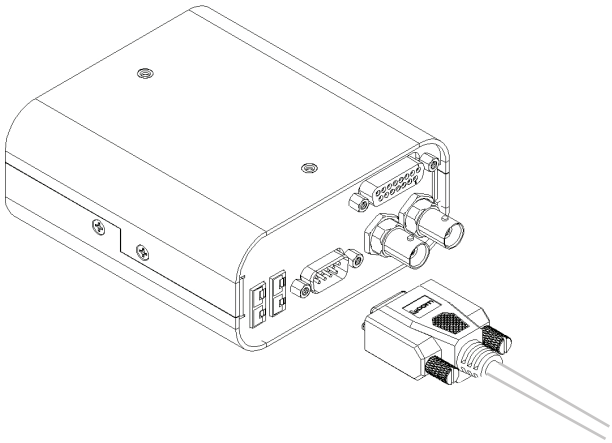

5. **Relay Cable from Eon™ to Mirage™**
Part of the DB-9 connector cable bundle that plugs into the Eon™ I/O port and relay provides a 2-wire interface for switching.

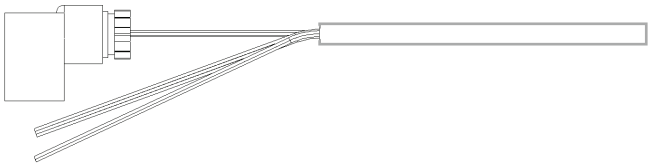

Connecting Eon™ to PC

1. **Install Eon™ Software onto PC**
   Insert the accompanying Eon™ software CD into disc drive. Follow prompts to install software onto PC.

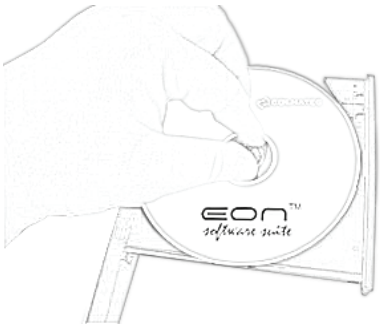

2. **RS-232 to Eon™**
   Plug RS-232 connector into female serial port on rear panel. Tighten integrated screws.

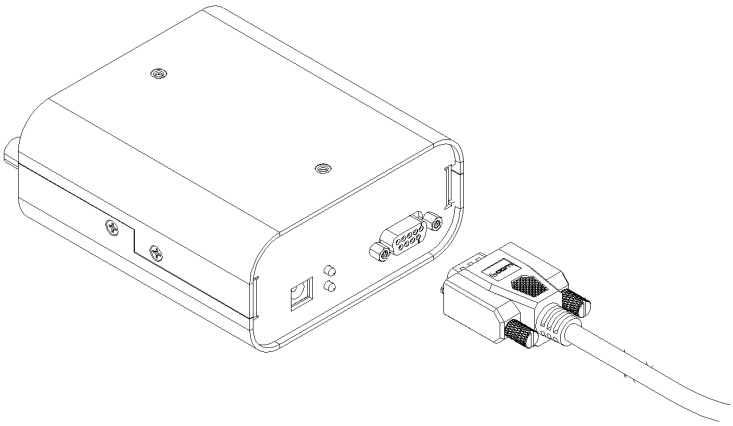

3. **RS-232 cable to USB Adapter**
   Plug the other end of the RS-232 cable into the USB-to-RS-232 adapter. Tighten integrated screws.

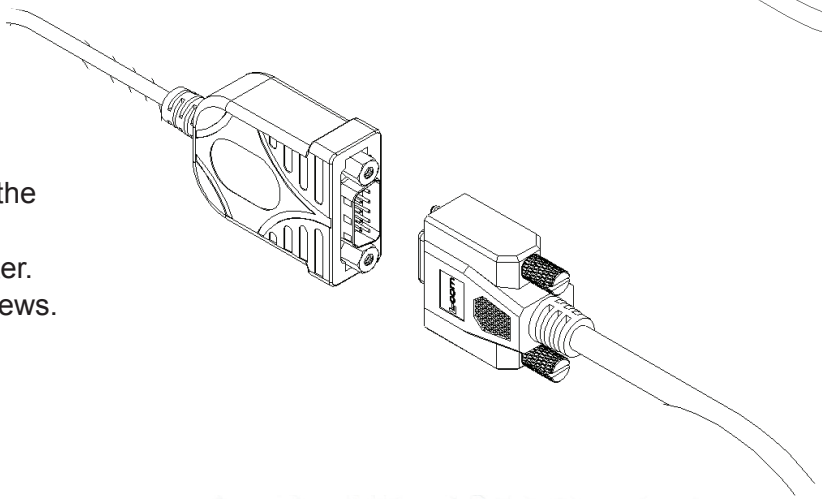

4. **Plug USB-to-RS-232 Adapter into PC**
   Plug USB-end of the USB-to-RS-232 adapter into PC.

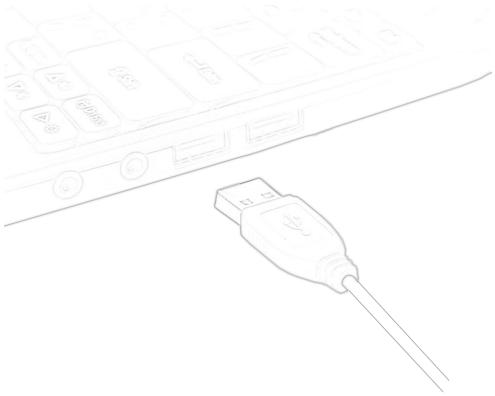

5. **Connect Power to Eon™**
   Plug Eon™ power adapter into AC outlet. Then plug DC connector into the Eon™.

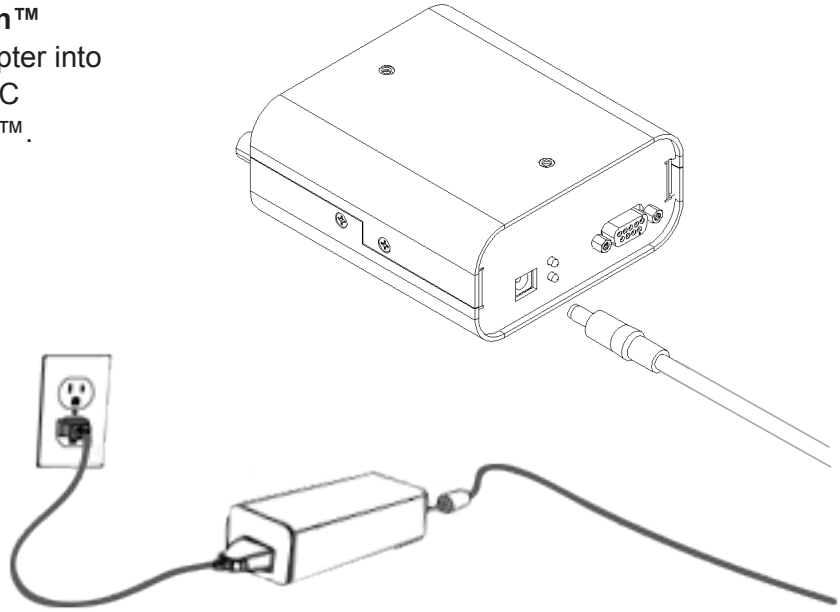

6. **Start Eon™ Software**
   Start Eon™ software and follow the First Start setup procedure described in the Eon™ User Manual (available on the Eon™ software CD).

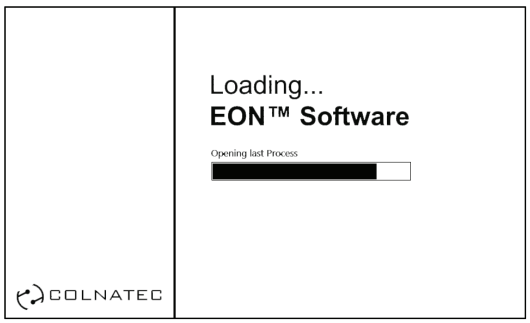

WARNING If drivers are already installed, simply update the drivers when installing software.

Use only the provided USB cable.

Ensure that the software has been fully installed before connecting the USB drivers.

Fully reboot the computer after the software installation to prevent drivers issues.

Troubleshooting

6

Symptom	Cause	Solution
Broken Crystals	Crystal not seated properly.	Make sure that the crystal is seated properly in the cap and retainer to avoid mechanical stress on the crystal when temperature rise.
Weak Crystal Reading	Contact spring may have become bent.	If the crystal contact spring has become bent, it may no longer apply even pressure against the crystal. Assuring the conical spring is concentric with the body may resolve this issue.
Insufficient Heat Conduction	The heater's ceramic insulators may have become dislodged.	Often the heater's ceramic insulators become dislodged if the heater has been vigorously tugged on. This will be apparent if the heater no longer compresses or sticks when pushed down, resulting in an insufficient contact to conduct heat to the retainer. Gently wiggling the heater back and forth can sometimes resolve this issue. Servicing may be required.
Cap Will Not Screw In	The heater leads may be bent.	Bent heater leads may be preventing the cap from centering. **Do not force the cap if it will not screw in**. Re-centering the heater in the head may resolve this issue.
Software Issues	Various possible causes.	See Eon™ Controller manual for software troubleshooting guide.
Inaccurate Temperature Readings	RTD pins may be faulty	See *Advanced Troubleshooting* (Page 27) for possible solutions to these issue.
Heater Unresponsive	Heater pins may be faulty	

Because it is a scientific instrument, the Tempe™ sensor head should be treated with care. In the event of any difficulties please contact Colnatec's Customer Support. Excessive tinkering or fiddling may result in greater damage to the unit. If you cannot resolve an issue, please contact **support@colnatec.com**, or call **(480) 634-1449**.

Advanced Troubleshooting

Determining if Tempe™ heater is faulty

- Measure the resistance between pin C and D.
- Expected Values @ ~25C
- RTD resistance between pin C and D: 4-6Ω

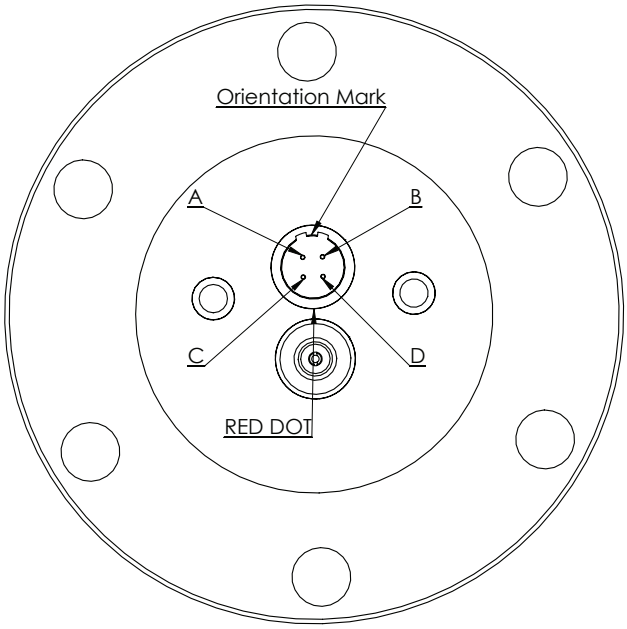

WARNING Do not attempt to repair electrical problems. Tampering with the Tempe™ electrical systems may result in electrical fire, increased interference in crystal measurement, and damaged ceramic insulators.

Specifications

7

Hardware

Flange Size	KF40, KF50, CF275
Head Orientation	180° Concentric
Sensor Length	(designed to specification)
Cooling Tube	3/16 Diameter
Component Materials	Sensor Body 304 SS, alumina insulators, nickel alloy contact springs, 304 SS screws
	Heater Aluminum nitride heater with tungsten traces
	Type K Thermocouple 304 SS Sheath, .125”
	Crystal Cable Stainless steel-covered high-temp wire; nickel plated copper wire conductor
	Internal Heater Power Cable High-temp wire; nickel-plated copper wire conductor
Dimensions	Length 4” to 32” depending on customer requirements
	Cross Section Able to be passed through a 2.75” ConFlat port
Operating Tempera-ture	40-500º C
Vacuum Rating	1x10-5 Torr
Material	AIS304 SS
Part Number	CNT-TMP-2000 Rev. 3.1 (B)

Electronics

Temperature Range	0-500°C
Heater	24 [VDC] 5 [Amp]
Heater/RTD Connection	4-pin LEMO
Crystal	Standard 14 [mm]
Frequency Measurement Connection	SMA Coaxial

Tempe-Eon™ System

A Appendix

Tempe-Eon™ System Configuration

Rendering illustrates basic connections of Tempe-Eon™ system.

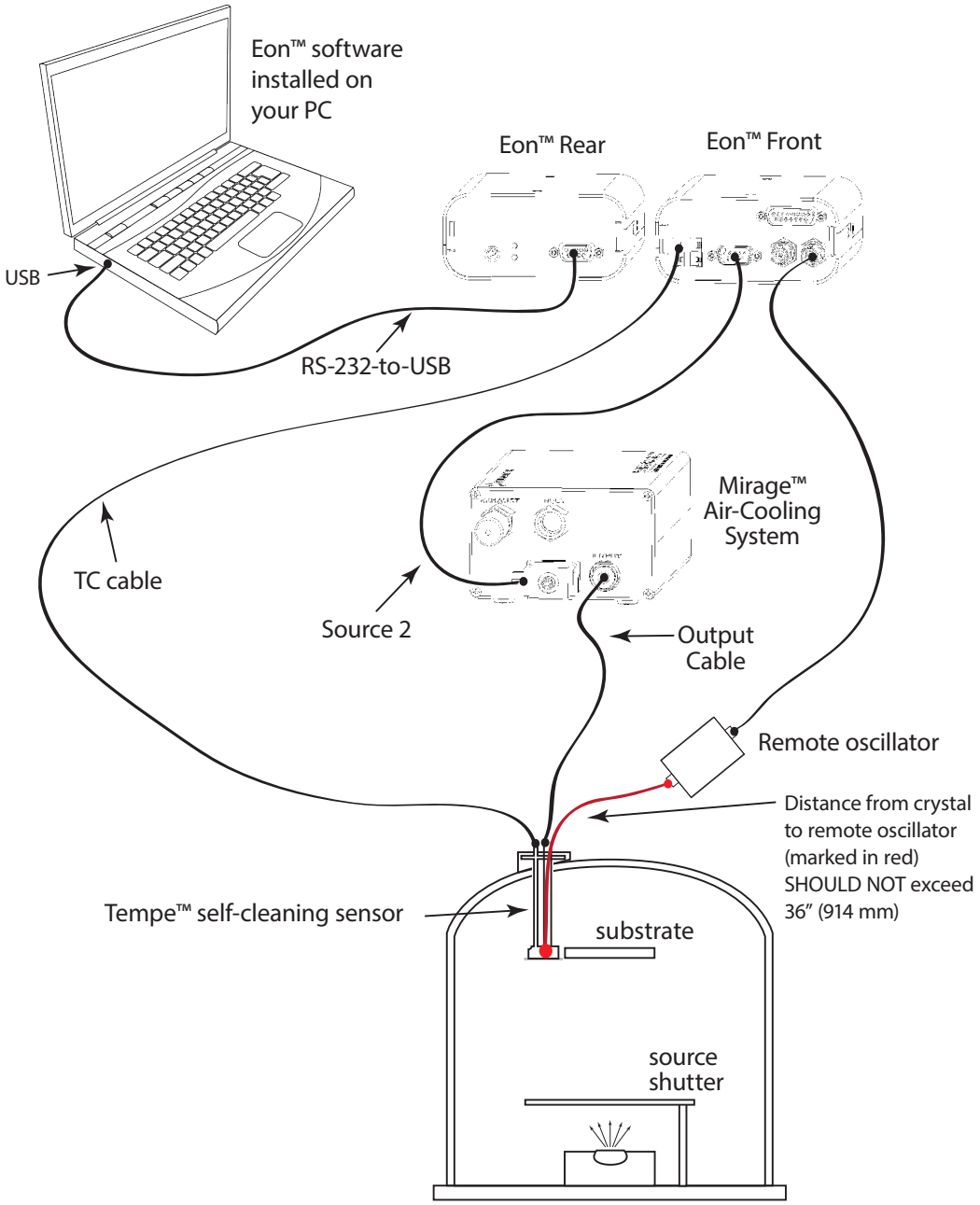

Safety, Handling, & Support

B Appendix

WARNING All electrical components are to be considered extremely dangerous if tampered with in any way. Colnatec is not liable for any injury resulting from product misuse, modification, or disassembly.

WARRANTY LABEL If the warranty label has been tampered with, “VOID” will appear where the warranty label was originally placed. If this is visible at the time of arrival, it is important that you contact Colnatec immediately after receiving the product.

EXAMINE YOUR NEW TEMPE™ FOR ANY SIGNS OF PHYSICAL DAMAGE. Before shipping, your Tempe™ was calibrated and tested by Colnatec to meet the highest quality standards. It is important that you take a few minutes to inspect the product to ensure that your equipment was not damaged or otherwise tampered with during transit.

About Tempe™

Heating a thin film sensor head can serve a variety of important purposes. Some applications require elevated chamber temperatures. Because it is able to match and maintain temperatures inside the chamber (within a range of 50-500ºC), the Tempe™ can provide accurate readings from the very beginning of the process. Other thin film sensors in this situation will always yield false readings, as the initial temperature of the sensor head will always be in disequilibrium with the temperature of the chamber.

The unique ability of the Tempe™ to achieve extreme temperatures has the added benefit of extending crystal life indefinitely. Utilizing a “bake” process that heats the sensor head in situ, residual deposition material is burned away from the crystal. In most instances (depending on the type of material being deposited), the crystal can be restored to a fully operational state. This procedure both rejuvenates the crystal and reduces interruptions in a continuous process environment.

Inspection and Initial Setup

Examine Tempe™ for any signs of physical damage. Also, make sure that the tamper-evident labels are intact. In order to ensure safe, correct operation of your Eon™, please follow the step-by-step instructions presented in the Eon™ Quick Start guide included with your product.

Warranty

Tempe™ is warranted to the original purchaser to be free of any manufacturing-related defects for one year from the date of purchase. Colnatec reserves the right to repair or replace the unit after inspection.

Contact Colnatec Support

625 N. Gilbert Road, Suite 205
Gilbert, AZ 85234
(480) 634-1449
support@colnatec.com
colnatec.com

Tooling Factor

C Appendix

$$\text{Tooling } \% = \left(\frac{dc}{ds}\right) \cdot 100$$

$$\text{Tooling } \% = \left(\frac{dc}{ds}\right)^2 \cdot 100 \cdot \left(\frac{\cos \text{ø}s}{\cos \text{ø}c}\right)$$

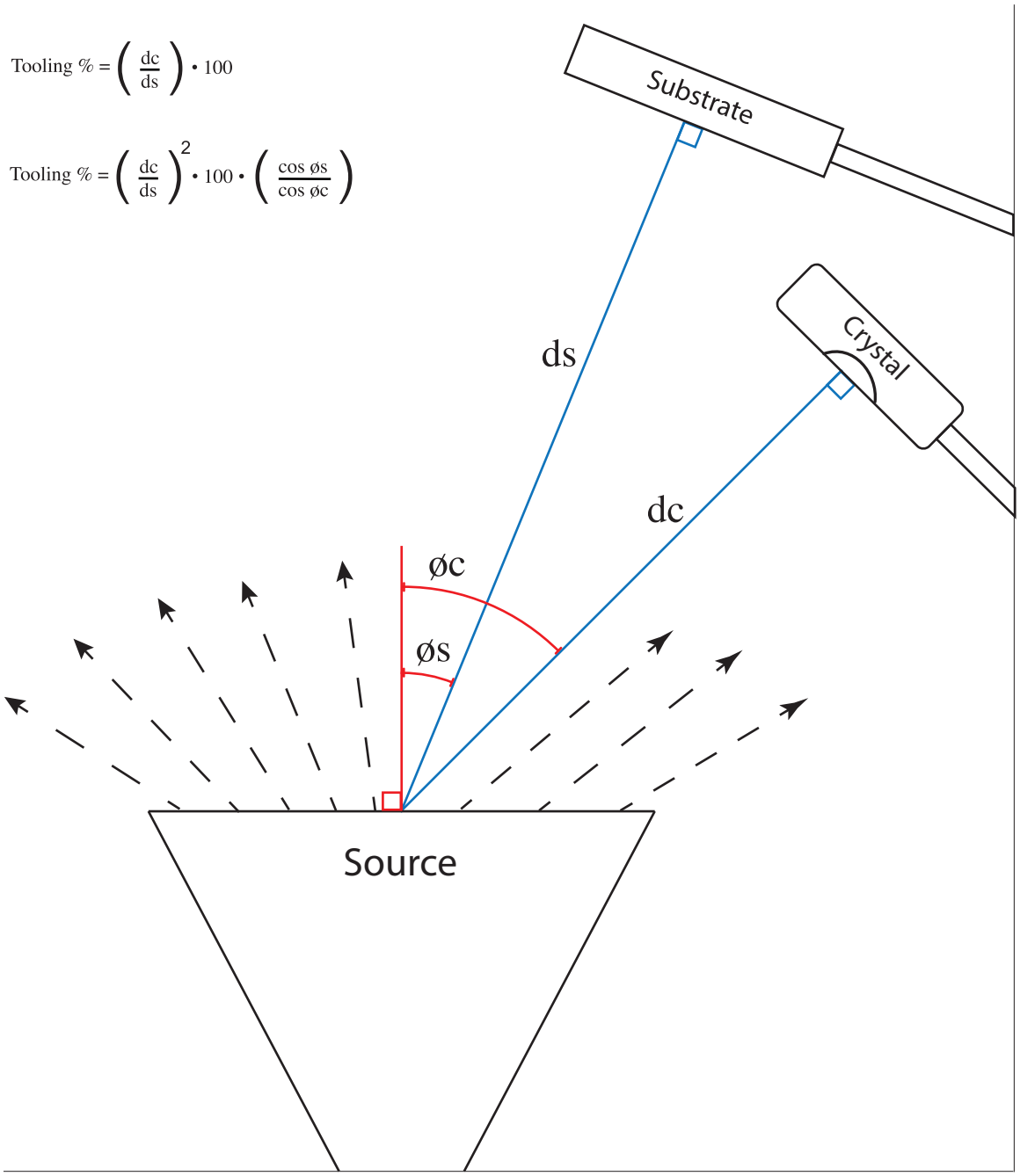

Tempe™ Dimensions

D Appendix

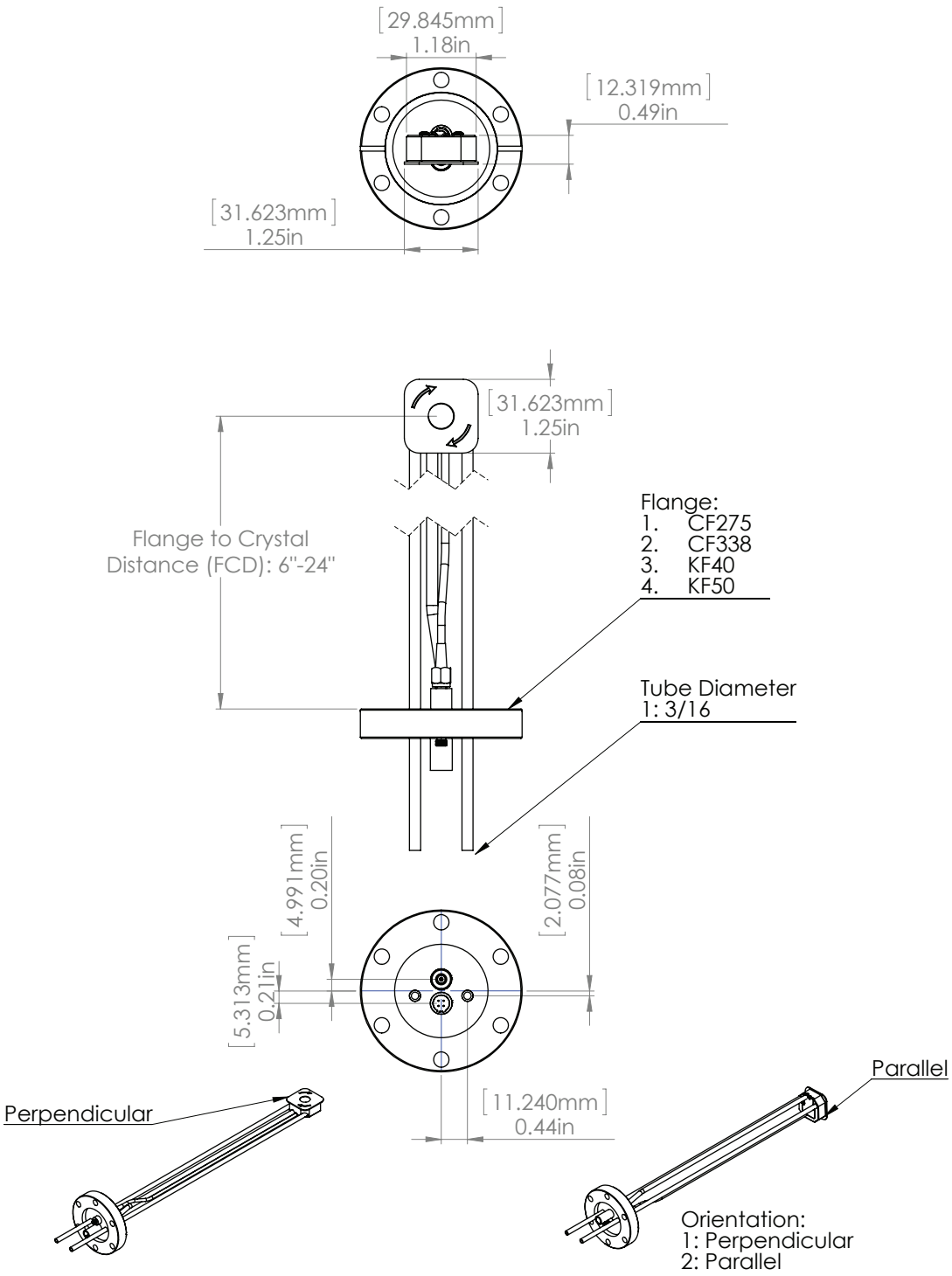

Index

July 5, 2017
Gen_2